eSET Touchfree Basin mixer with temperature setting for combining with wall-mounted fittings -

35 741 970

- lead-free
- 2x male thread 1/2" connection
- 2x back flow preventer
- 2x integrated supply stop
- concealed installation
- min. recess depth 90 mm
- max. recess depth 125 mm

Can be combined with spouts from the Vaia, Lissé, CL.1, IMO, Tara., Tara Logic, Meta.02, Deque, Supernova, Symetrics, LULU and MEM series

Cannot be combined with spouts with a pull-rod pop-up waste.
Please combine with item no. 10 126 970-FF

Other series and finishes on request (x-TRA SERVICE)

ATTENTION: Separate terms and conditions for electronic articles are applicable.

eSET Touchfree Basin mixer with temperature setting for combining with wall-mounted fittings -

35 741 970
mm [inches]

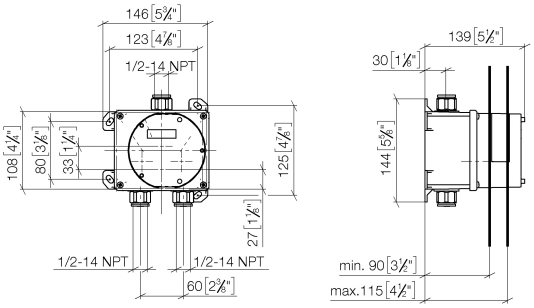

Codes & Standards

UL 1951

eSET Touchfree Basin mixer with temperature setting for combining with wall-mounted fittings -

35 741 970

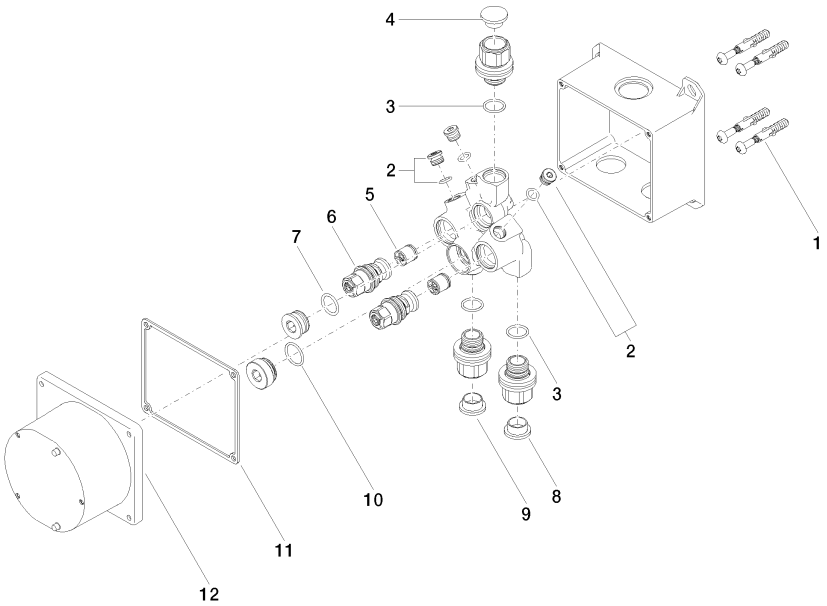

Spare parts list

No.	Item Number	Name	Quantity used	Delivery time
1	04 30 31 024 01 90	fixing set	2	2
2	04 31 20 039 11 90	plug	3	2
3	90 14 10 010 00 90	seal	3	2
4	09 31 20 092 90	plug	1	2
5	90 23 01 040 00 90	back-flow preventer	2	2
6	04 29 05 031 01 90	insert	2	2
7	09 14 10 117 90	seal	1	2
8	09 31 20 094 90	plug	1	2
9	09 31 20 093 90	plug	1	2
10	09 14 10 031 90	seal	1	2
11	09 14 03 103 90	seal	1	2
12	09 11 11 011 90	lid	1	2

We reserve the right to change designs, product range and technical specifications without prior notice.
More information can be found at: www.dornbracht.com +49 (0) 2371 8899 900 mail@dornbracht.com